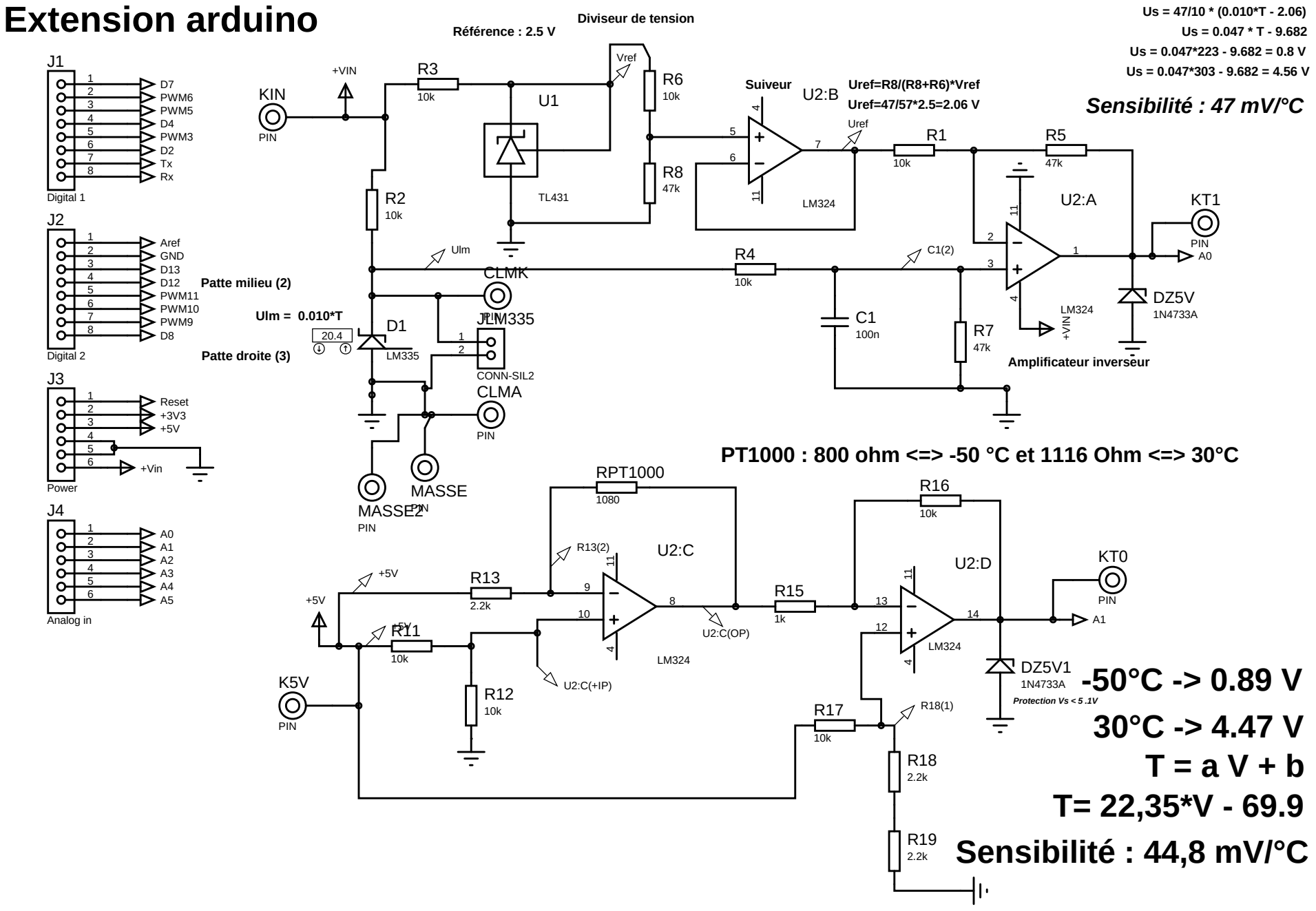Extension arduino